ANALYTICAL SALES & SERVICES, INC. PROPRIETARY

NOTES:

1. ACTIVE BASE LUMIDOX DEVICES ARE NOT COMPATIBLE WITH MAGNETIC STIRRERS

REVISION HISTORY			
REV	DESCRIPTION	DATE	APPROVED
1A	INITIAL RELEASE	8/10/2020	ENGINEERING
1B	UPDATED DIMENSIONS AND FORMAT	7/16/2025	ENGINEERING

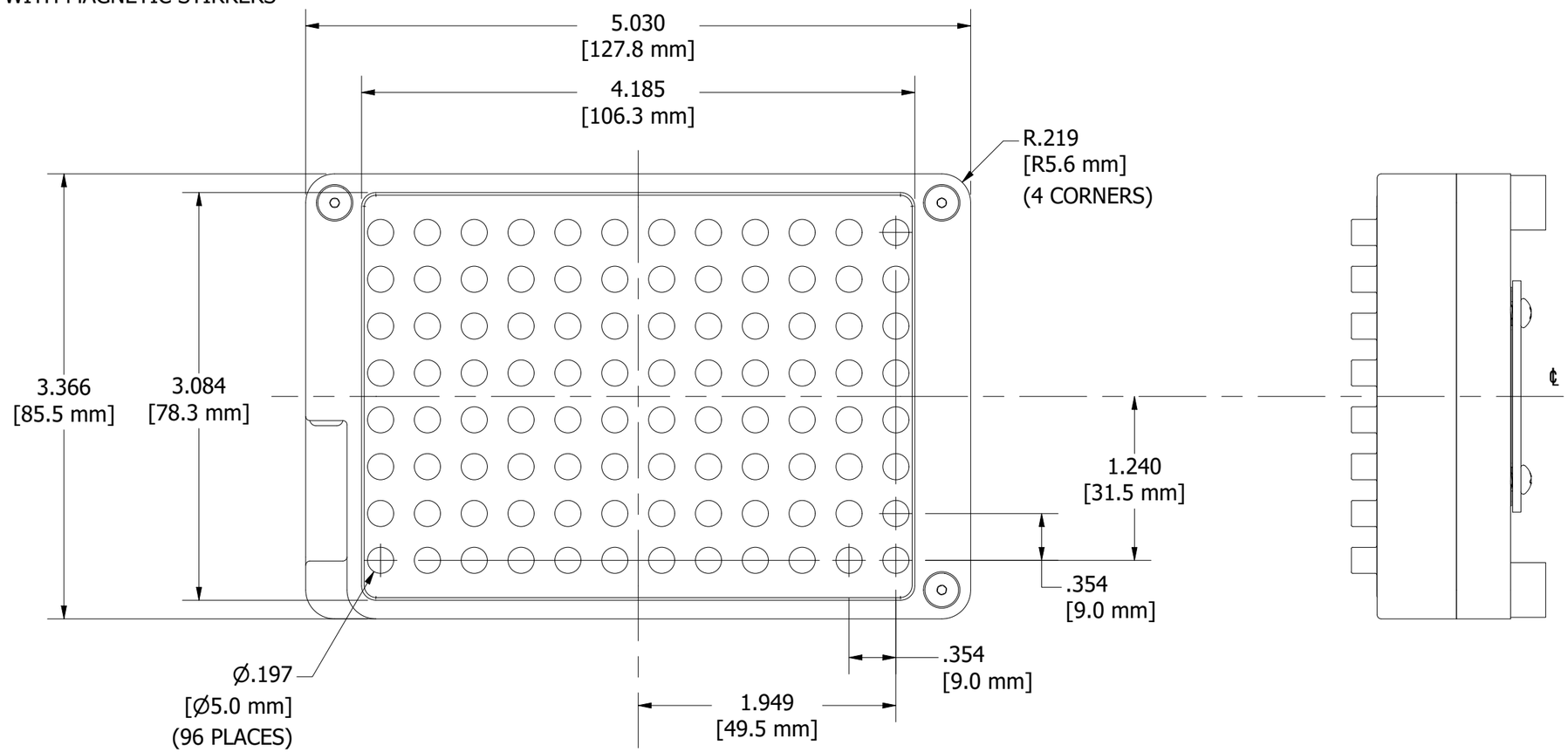

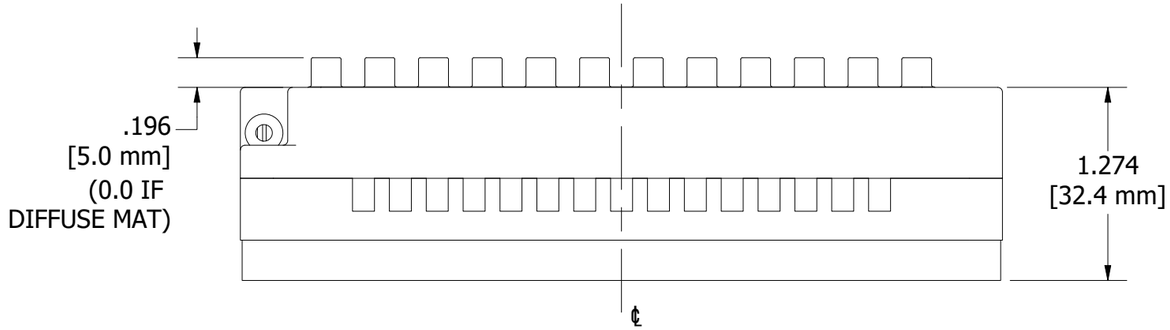

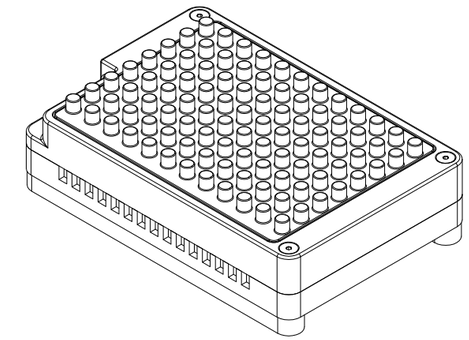

LENS MAT

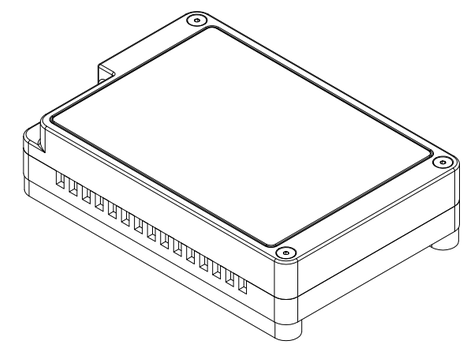

DIFFUSE MAT

P

DRAWN Matt Dabrowski	8/10/2020	**ANALYTICAL** SALES & SERVICES, INC © 2025
email engineering@analytical-sales.com		TITLE lumidoxII_active_base_rev1b_PUBLIC
		SIZE B / REV 1B
		SCALE 1 : 1 / SHEET 1 OF 1