ANALYTICAL SALES & SERVICES, INC. PROPRIETARY

REVISION HISTORY			
REV	DESCRIPTION	DATE	APPROVED
1F	INITIAL RELEASE	1/12/2026	ENGINEERING

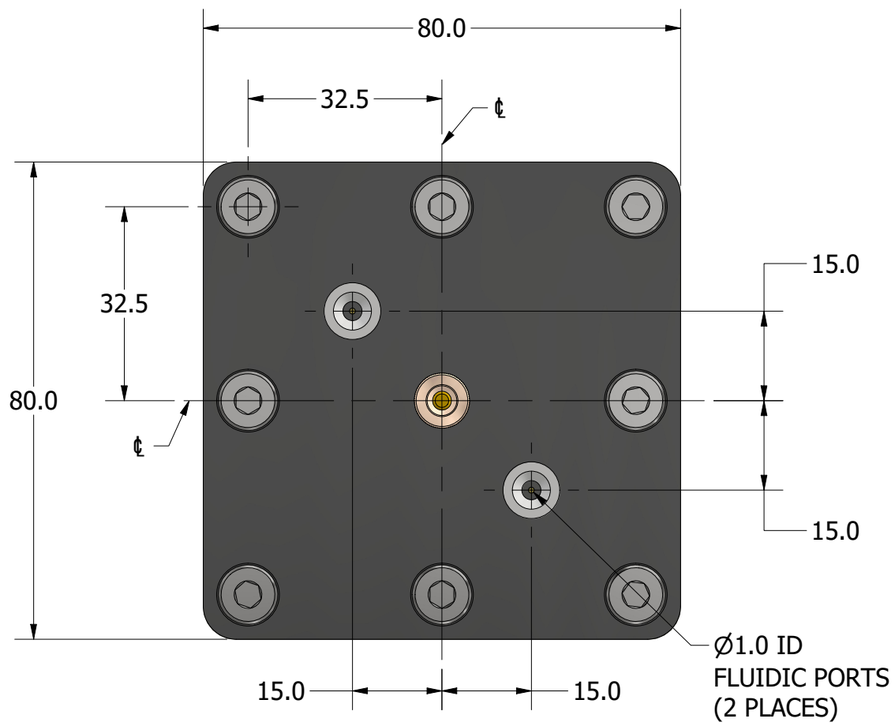

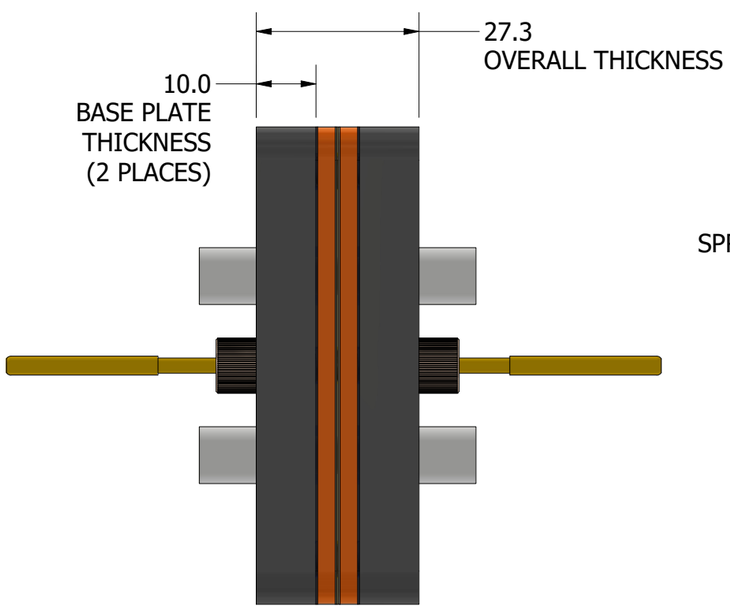

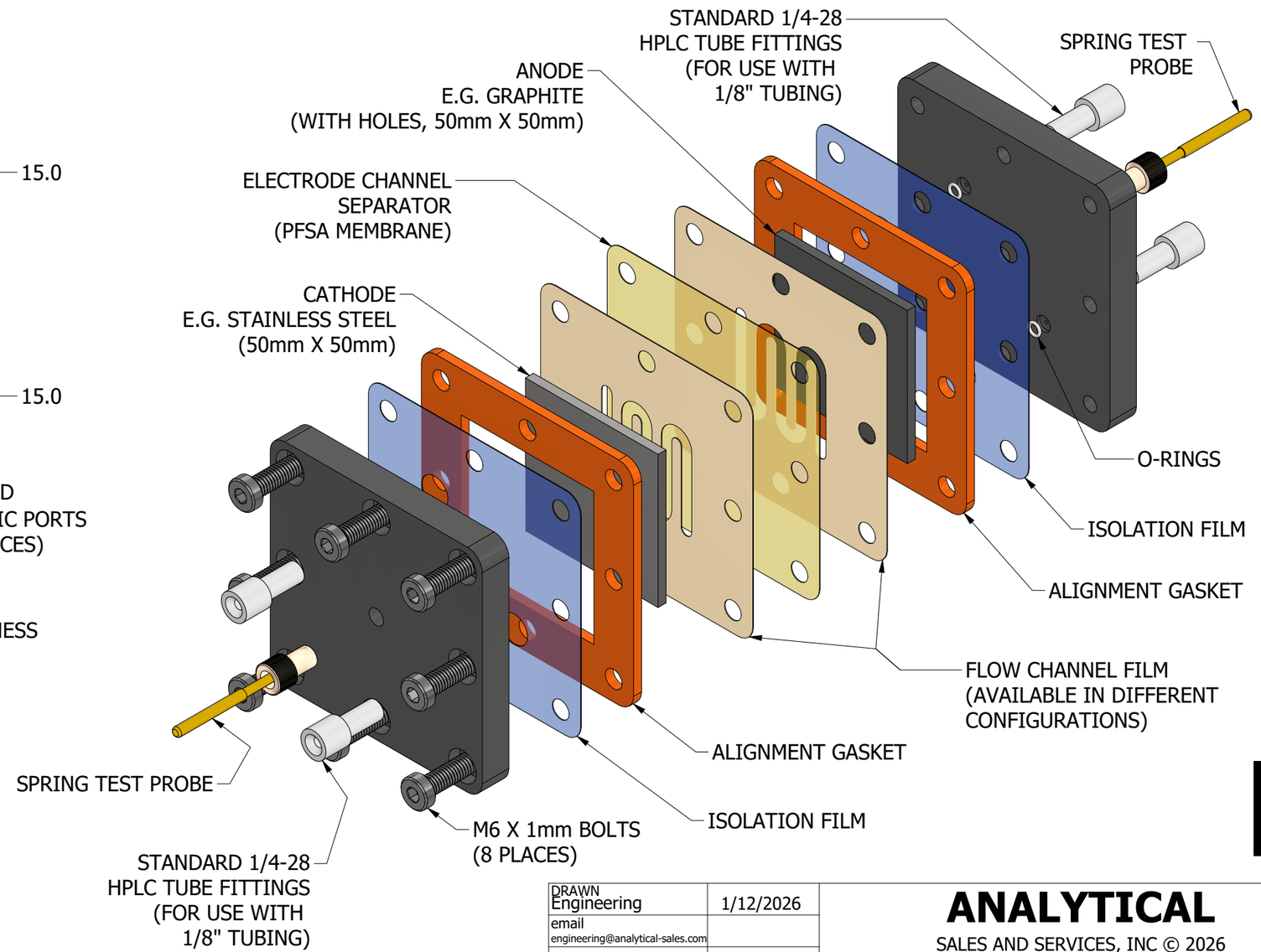

P

DRAWN Engineering	1/12/2026	**ANALYTICAL** SALES AND SERVICES, INC © 2026
email engineering@analytical-sales.com		
DIMENSIONS: [mm]		TITLE F1088200_divided_flow_electrolysis_rev1f_PUBLIC
		SIZE B / REV 1F
		SCALE 1 : 1 / SHEET 1 OF 1